CRYSTAL DOORS

Unit 1, Gorrells Way
Transpennine Trading Est
Rochdale
OL11 2PX

Co Reg No: 2962055,
Crystal Doors is the trading
name of Righthouse Limited
VAT Reg No: 652 5431 47

Tel: 01706 351010 Fax: 01706 559524 Web: www.crystaldoors.co.uk Email: info@crystaldoors.co.uk

EULAR ORDER FORM

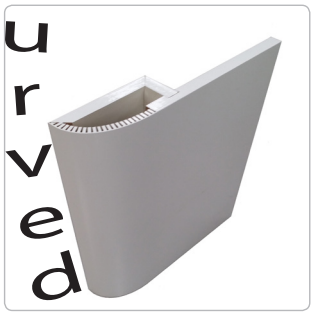

To make chunky panels, shelves, cabinets or work tops this solution is flexible for all and is custom made to your perfect size. From 38mm folded over to 500+ mm deep as an end panel, your options as a designer now have few limits. This solution is of one-piece construction providing an exceptional finish for chunky furniture. All panels are manufactured using 18mm board only.

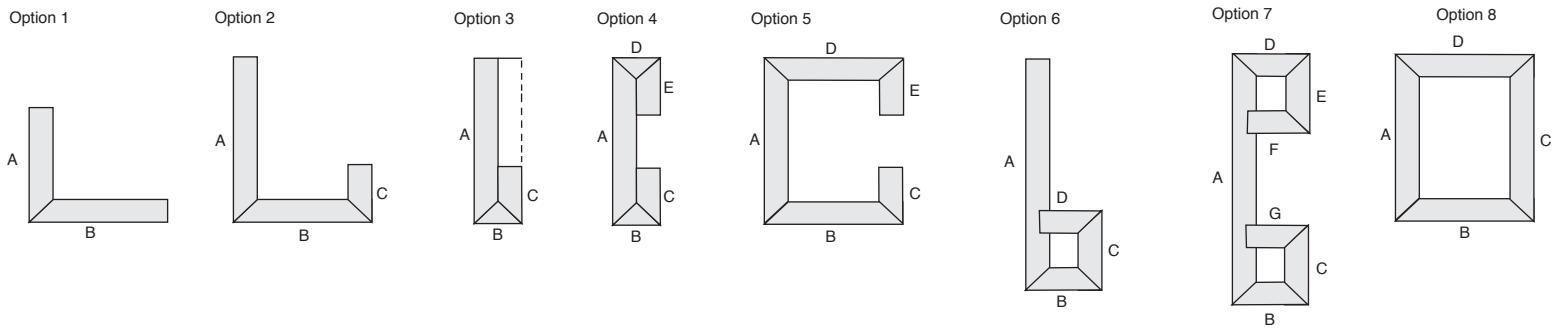

EXAMPLE

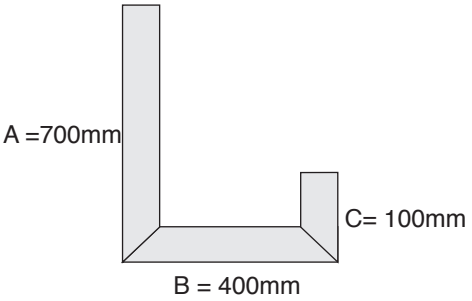

All dimensions added together must not exceed 1200mm width.
Eg.. A= 700 B= 400 C= 100 Total = 1200mm

Maximum panel size

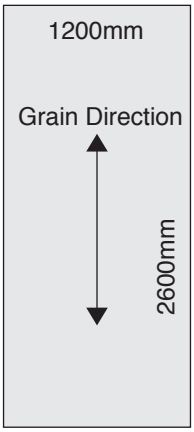

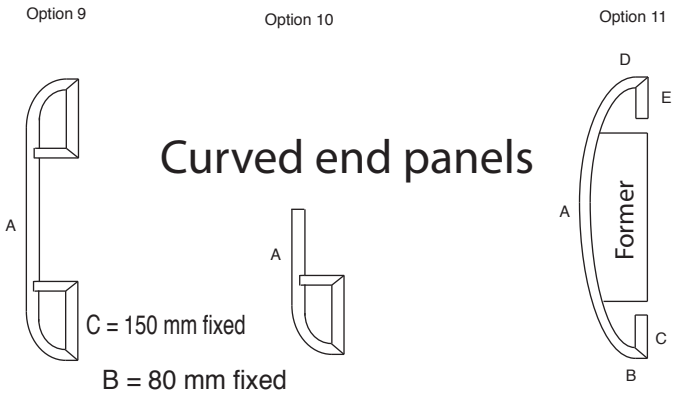

Qty	Option (1-11)	Height	Grain Direction	A	B	C	D	E	F	G
Example	2	700mm	Horizontal	700mm	400mm	100mm				